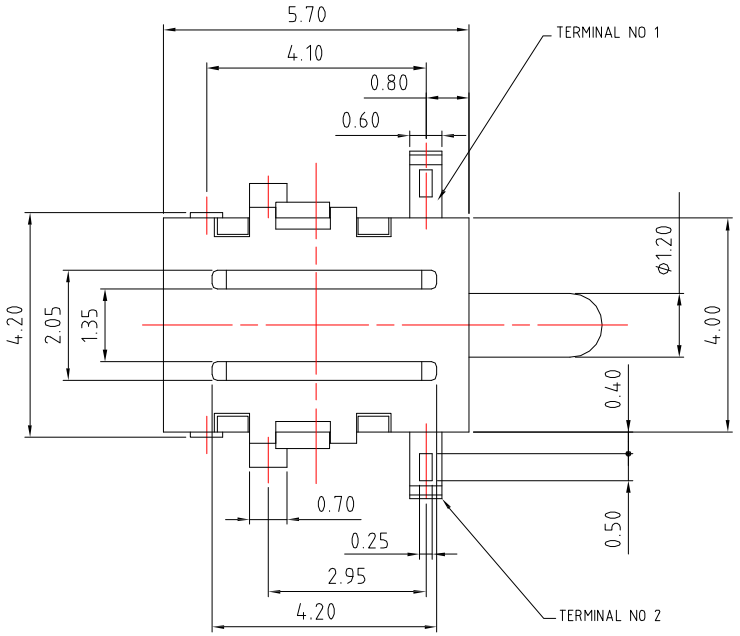

SOLDER LAND DIMENSIONS

(VIEWED FROM THE DIRECTION "A")

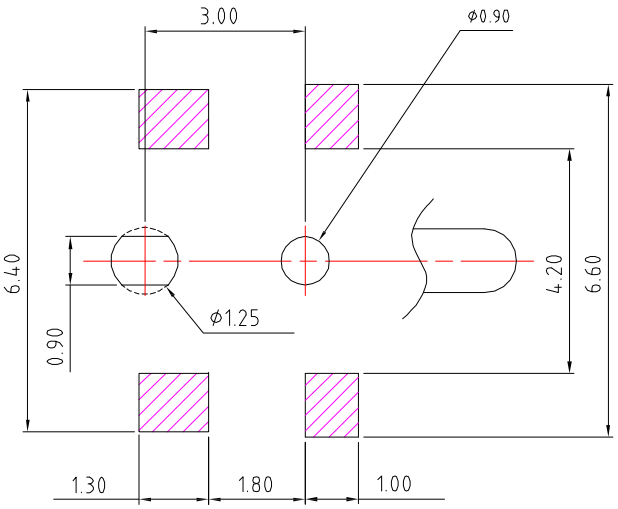

RoHS Compliant

CIRCUIT DIAGRAM(NORMAL)

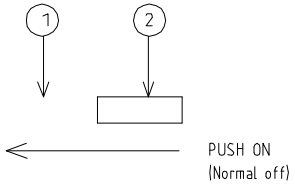

A

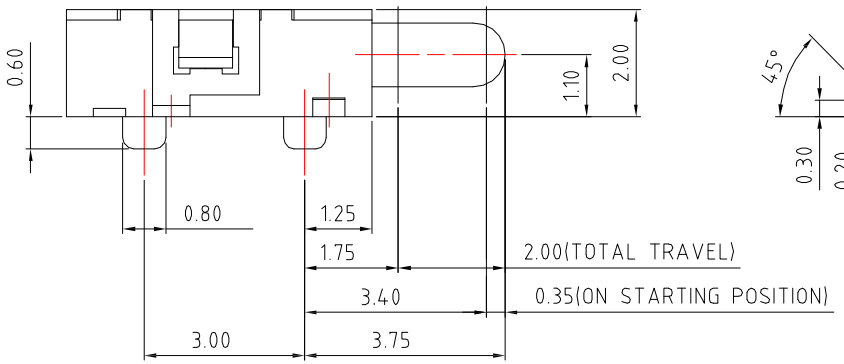

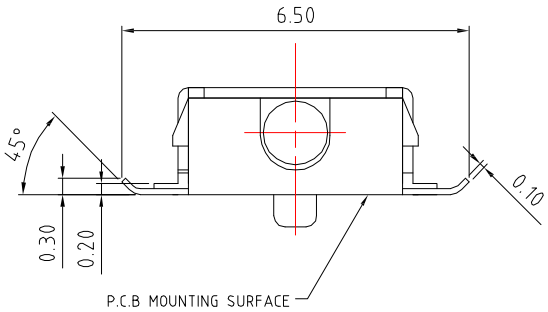

NOTE

1.RATING : DC 12V, 100mA(RESISTIVE LOAD)

2.OPERATING FORCE : 70gf MAX

3.LIFE CYCLE : 50,000 CYCLES

4.COLOR : CASE, ACTUATOR - BLACK

ITEM NO.	DESCRIPTION	DRAWN	DATE
1	更新OF	Jack	072213

CONTACT 建倚科技股份有限公司 CONTACT TECHNOLOGY CORP.

TOLERANCE UNLESS OTHERWISE STATED : Up to 5 ±0.2; Above 5 ~ 15 ±0.3; Above 15 ~ 30 ±0.4; Above 30 ~ 50 ±0.5; Angle ±0.3°

3RD. ANGEL'S | UNITS MM

DRAWN BY: Jack Lu	DATE 07/22/13	MAT'L	
CHECKED BY: Jacky Chen	DATE 07/22/13	FINISH	
APPROVED BY: Tony Kao	DATE 07/22/13	SCALE 1 : 1	SHEET NO. 1 of 1

TITLE	SWITCH		
MODLE	DECTECTOR SWITCH		
DWG NO.	DS-B50	SIZE	A4
PART NO.	DS-B50	VER	R1