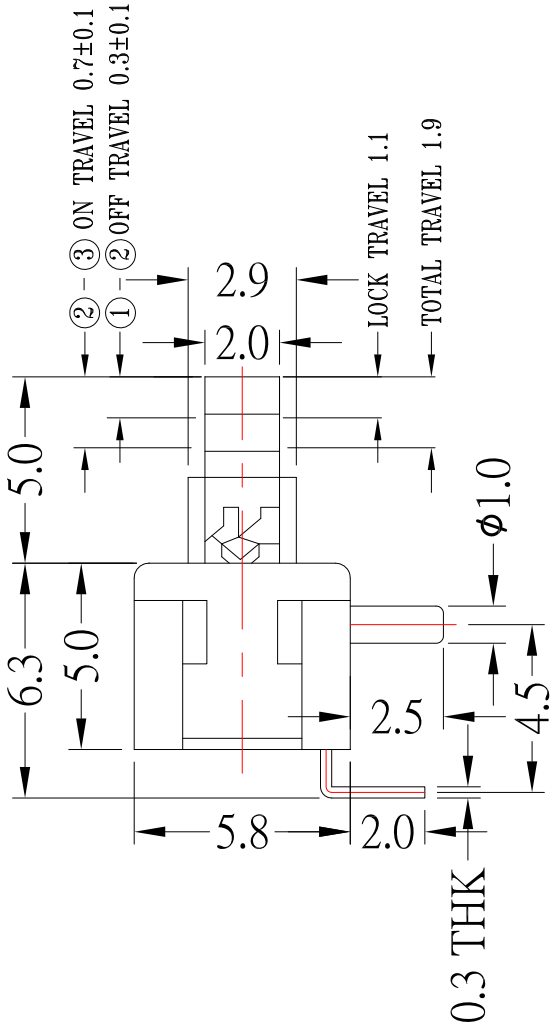

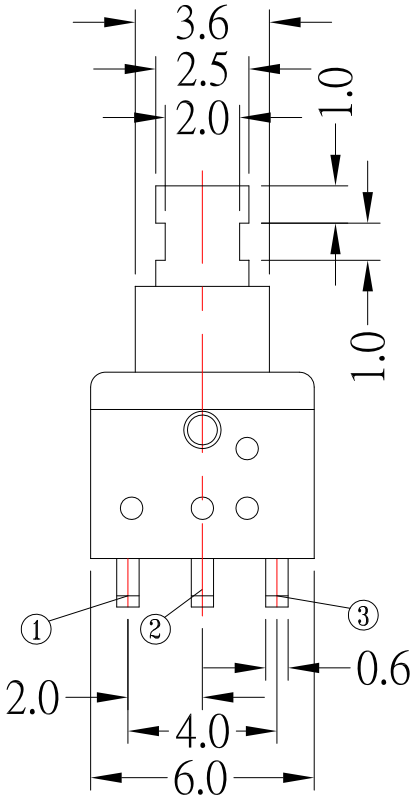

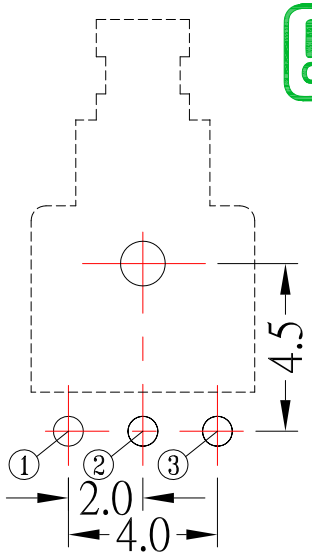

P.C.B. LAYOUT
BOTTOM VIEW

OPERATING MODE : SELF-LOCK : PS-D16H-S191

NON-LOCK : PS-D16HN-S191

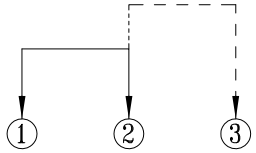

SCHEMATIC (NON SHORTING)

NO.	PARTS	MATERIALS	Q'TY	FINISH
7	CAM STICK	SUS	1	NATURAL
6	CONTACT	PHOSPHOR BRONZE	1	Ag Plated
5	SPRING	SUS	1	NATURAL
4	TERMINAL	BRASS	3	Ag Plated
3	COVER	PA66	1	BLACK
2	CASE	PA66	1	GREY
1	KNOB	PBT	1	WHITE

ITEM NO.	DESCRIPTION	DRAWN	DATE
6	更新圖面	Jack	031523
5	更新材質	Jack	120921
4	更新材質	Jack	112718
3	更新SPEC	Jack	111815
2	新增pcb layput孔徑尺寸	Jack	072215
1	更新Contact Resistance	Jack	010615

CONTACT 建倚科技股份有限公司
CONTACT TECHNOLOGY CORP.

TOLERANCE UNLESS OTHERWISE STATED : Up to 5 ±0.2; Above 5 ~ 15 ±0.3; Above 15 ~ 30 ±0.4; Above 30 ~ 50 ±0.5; Angle ±0.3°

3RD. ANGEL'S | UNITS MM

DRAWN BY: Jack Lu	DATE 03/15/23	MAT'L		TITLE	SWITCH
CHECKED BY: Jacky Chen	DATE 03/15/23	FINISH		MODLE	PUSH SWITCH
APPROVED BY: Tony Kao	DATE 03/15/23	SCALE	1 : 1	DWG NO.	PS-D16Hx-S191
		SHEET NO.	1 of 1	PART NO.	PS-D16Hx-S191

SIZE A4 | VER R6