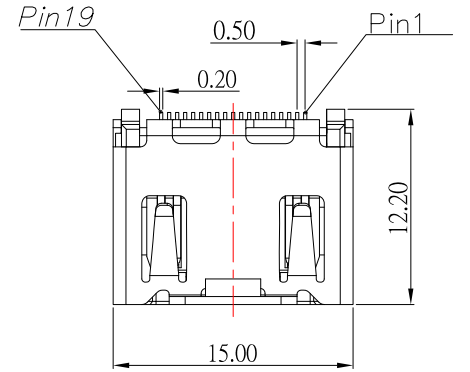

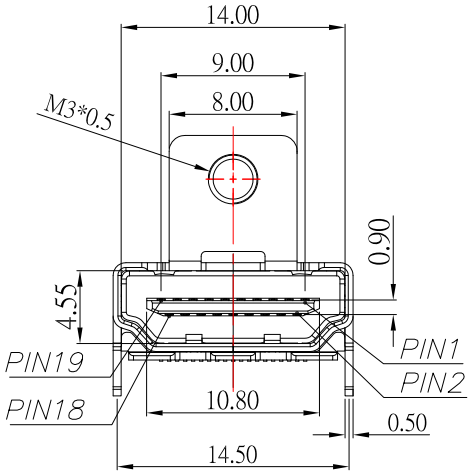

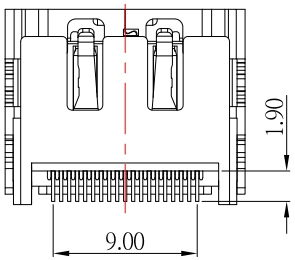

HDMI-19P-SND12x-S297

SHELL PLATED :

Blank	NI
G	GOLD

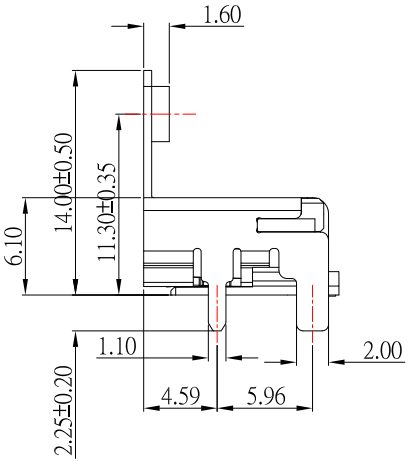

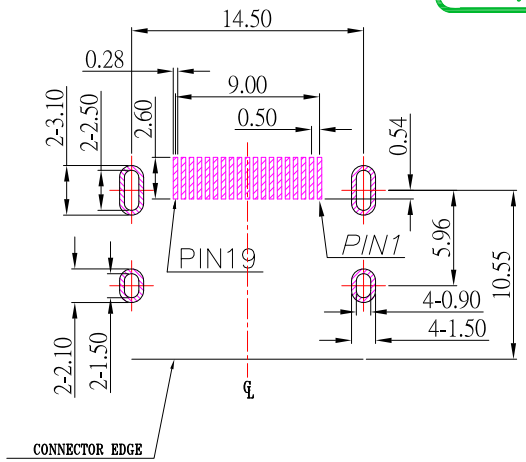

RECOMMENDED P.C.B. LAYOUT

NOTE:

1.MATERIAL:

1.1 HOUSING: LCP,UL94V-0 , BLACK

1.2 CONTACT: BRASS

1.3 SHEEL: BRASS

2.PLATING :

2.1 CONTACT: PLATED GOLD IN MATING AREA ;
TIN PLATED ON SOLDER BALLS ;
NICKEL UNDER PLATED OVERALL

2.2 SHELL: NICKEL UNDER PLATED SURFACE LAYER

3.ELECTRICAL:

3.1 RATING: 40V , 0.5A

3.2 INSULATION RESISTANCE: 100MΩ MIN

3.3 CONTACT RESISTANCE: 30 mΩ MAX

3.4 WITHSTANDING VOLTAGE: 500V AC / MINUTE

3.5 OPERATING TEMPERATURE: -25˚C~ 85˚C

ITEM NO.	DESCRIPTION	DRAWN	DATE
2	更新MODLE描述	Jack	020223
1	更新圖面	Jack	052020

CONTACT 建倚科技股份有限公司 CONTACT TECHNOLOGY CORP.

TOLERANCE UNLESS OTHERWISE STATED : Up to 5 ±0.2; Above 5 ~ 15 ±0.3; Above 15 ~ 30 ±0.4; Above 30 ~ 50 ±0.5; Angle ±0.3˚

3RD. ANGEL'S | UNITS MM

DRAWN BY: Jack Lu	DATE 02/02/23	MAT'L	
CHECKED BY: Jacky Chen	DATE 02/02/23	FINISH	
APPROVED BY: Tony Kao	DATE 02/02/23	SCALE 1 : 1	SHEET NO. 1 of 1

TITLE	CONNECTOR		
MODLE	HDMI AF SMT 單耳無柱,螺絲孔 H11.30mm		
DWG NO.	HDMI-19P-SND12x-S297	SIZE	A4
PART NO.	HDMI-19P-SND12x-S297	VER	R2