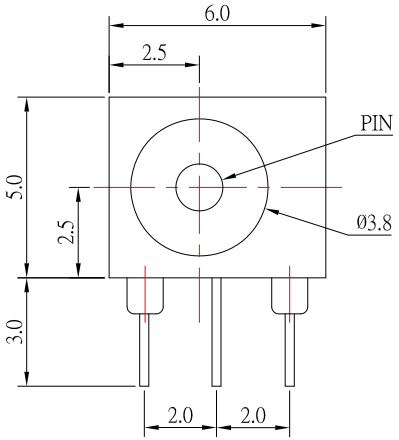

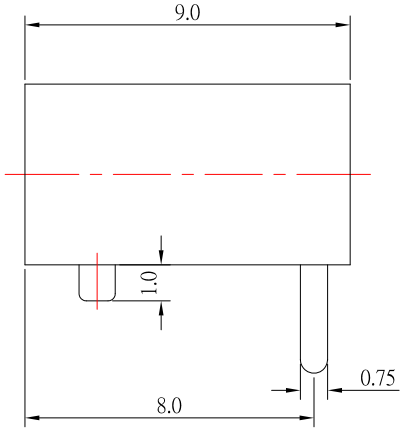

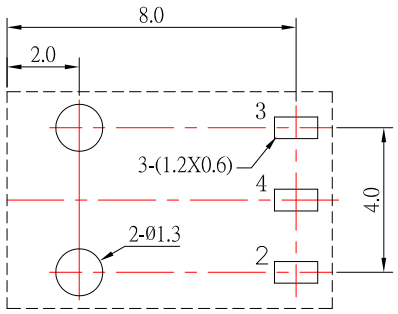

P.C.B LAYOUT
TOP VIEW

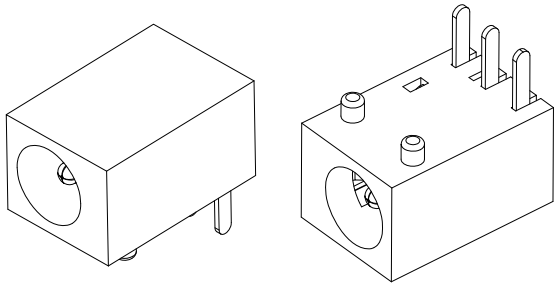

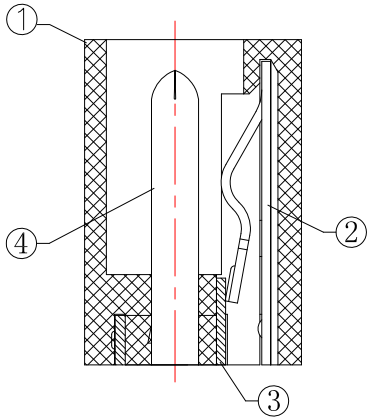

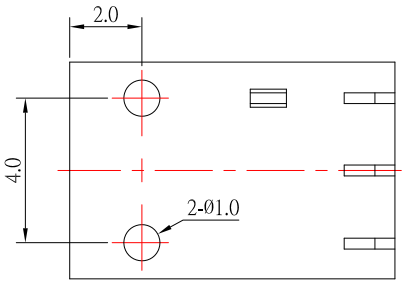

MODEL NAME	DC-015-x-S124
SCHEMATIC	4 / 3 / 2
CENTER PIN	ϕ1.0
	ϕ1.3

SPECIFICATION

1.Rating ：DC 30V 1.0A；
2.Contact resistance：≤50mΩ；
3.Insulation resistance：≥100MΩ；
4.Withstand voltage：500VAC ；
5.Insertion and extraction force：3-20N;
6.life test：5,000 cycles。

NO.	DESCRIPTION	QTY	MATERIAL	PLATING
④	PIN	1	BRASS	Ag-Plating
③	CURVE PIECE	1	BRASS	Ag-Plating
②	SPRING	1	STAINLESS STEEL	Ag-Plating
①	HOUSING	1	PA9T	

ITEM NO.	DESCRIPTION	DRAWN	DATE
1	更新爲A0版	Jack	040717

CONTACT 建倚科技股份有限公司
CONTACT TECHNOLOGY CORP.

TOLERANCE UNLESS OTHERWISE STATED : Up to 5 ±0.2; Above 5 ~ 15 ±0.3; Above 15 ~ 30 ±0.4; Above 30 ~ 50 ±0.5; Angle ±0.3°

3RD. ANGEL'S | UNITS MM

DRAWN BY: Jack Lu	DATE 04/07/17	MAT'L	
CHECKED BY: Jacky Chen	DATE 04/07/17	FINISH	
APPROVED BY: Tony Kao	DATE 04/07/17	SCALE 1 : 1	SHEET NO. 1 of 1

TITLE	JACK		
MODLE	DC JACK		
DWG NO.	DC-015-x-S124	SIZE	A4
PART NO.	DC-015-x-S124	VER	A0