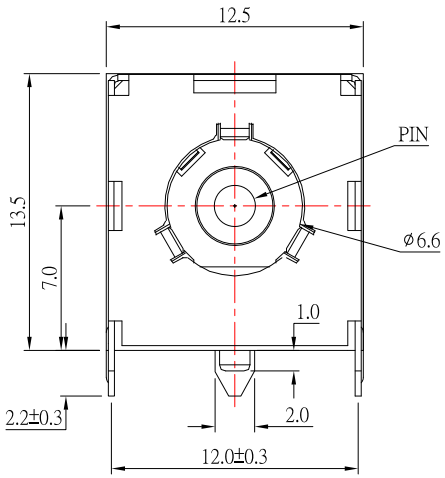

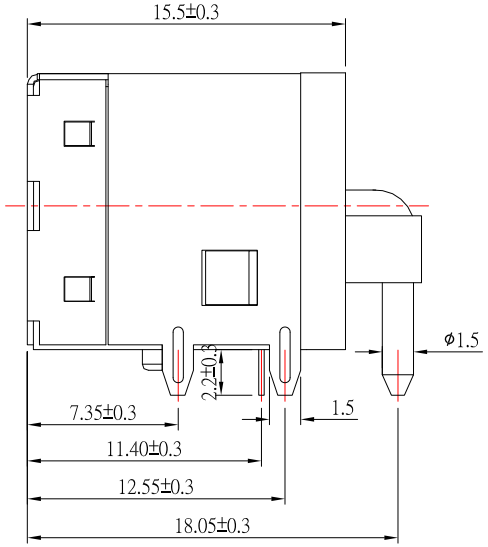

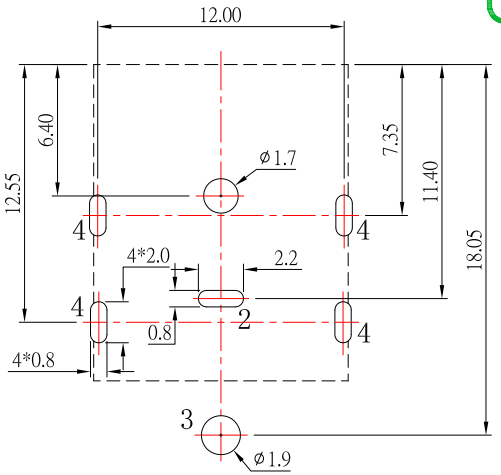

P.C.B LAYOUT
TOP VIEW

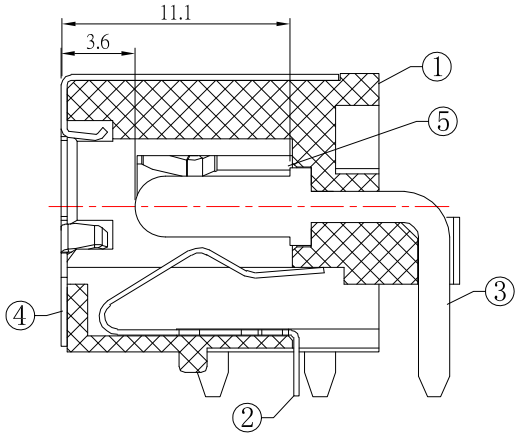

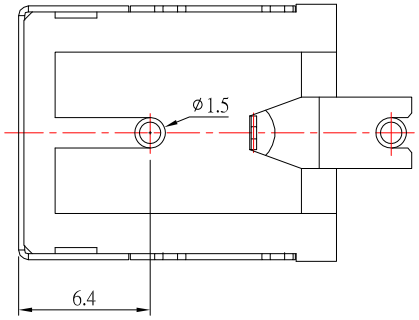

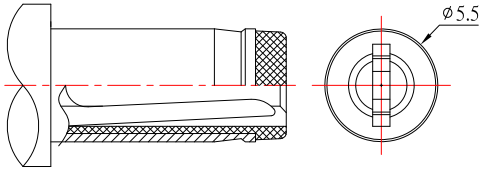

RECOMMENDED PLUG

Model NO.	DC-079HS-2.0	DC-079HS-2.5
PIN(X)	ϕ2.0	ϕ2.5

MODEL NO.	DC-079HS-x
SCHEMATIC	3 2

SPECIFICATION

1.Rating ：DC 54V, 5.0A
2.Contact resistance：≤ 30mΩ
3.Insulation resistance：≥100MΩ
4.Withstand voltage：500VAC
5.Insertion and extraction force：5-30N
6.life test：5,000 cycles

NO.	DESCRIPTION	QTY	MATERIAL	PLATING
5	SPRING PIECE	1	SUS	Sn-Plating
4	COAT	1	SPCC	Ni-Plating
3	PIN	1	BRASS	Ni-Plating
2	SPRING PIECE	1	PHOSPHOR BRONZE	Sn-Plating
1	HOUSING	1	PA9T	

ITEM NO.	DESCRIPTION	DRAWN	DATE
2	更新Rating	Jack	082721
1	更新圖面	Jack	083120

CONTACT 建倚科技股份有限公司
CONTACT TECHNOLOGY CORP.

TOLERANCE UNLESS OTHERWISE STATED : Up to 5 ±0.2; Above 5 ~ 15 ±0.3; Above 15 ~ 30 ±0.4; Above 30 ~ 50 ±0.5; Angle ±0.3°

3RD. ANGEL'S | UNITS MM

DRAWN BY: Jack Lu	DATE 08/27/21	MAT'L		TITLE	JACK		
CHECKED BY: Jacky Chen	DATE 08/27/21	FINISH		MODLE	DC JACK		
APPROVED BY: Tony Kao	DATE 08/27/21	SCALE	1 : 1	DWG NO.	DC-079HS-x-S124	SIZE	A4
		SHEET NO.	1 of 1	PART NO.	DC-079HS-x-S124	VER	R2