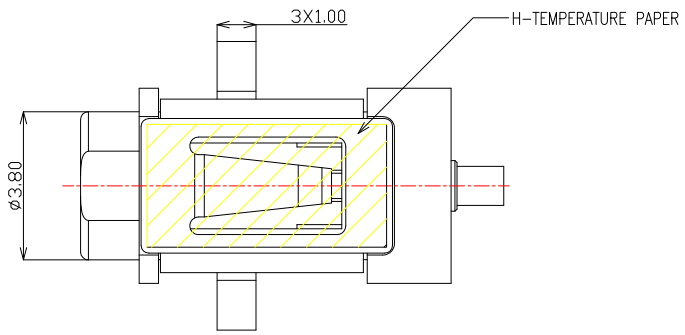

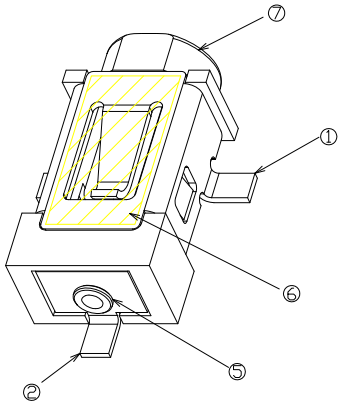

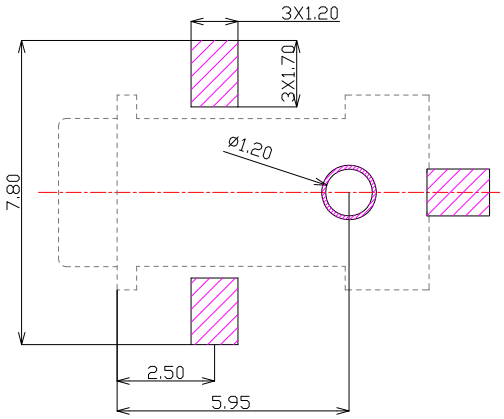

LAYOUT PCB
BOTTOM VIEW

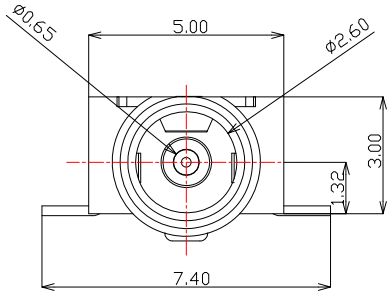

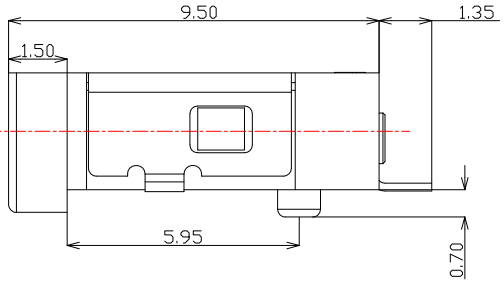

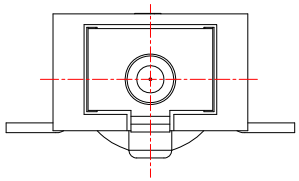

SPECIFICATION

1.Rating ：0.5A , 30VDC；
2.Contact resistance：≤50mΩ；
3.Insulation resistance：≥100MΩ；
4.Withstand voltage：500VAC ；
5.life test：5,000 cycles。
6.Connector mating forces : 20N (2.04Kgf) Max ;
7.Connector unmating forces :2N(0.204Kgf) Min 。

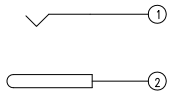

CIRCUIT DIAGRAM

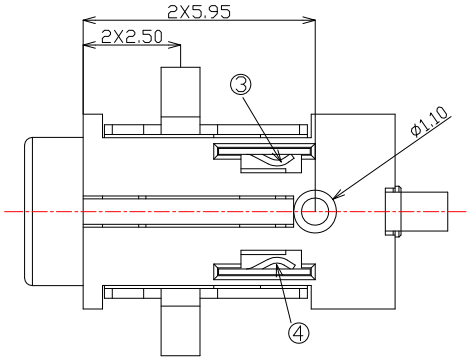

ITEM	NAME	Q'TY	MATERIAL	DESCRIPTION
7	MYLAR	1		
6	HOUSING	1	HTN	
5	CONTACT E	1	PHOSPHOR BRONZE	GOLD PLATED
4	CONTACT D	1	STAINLESS STEEL	
3	CONTACT C	1	STAINLESS STEEL	
2	CONTACT B	1	BRASS	GOLD PLATED
1	CONTACT A	1	PHOSPHOR BRONZE	GOLD PLATED

ITEM NO.	DESCRIPTION	DRAWN	DATE
3	新增SPEC	Jack	080415
2	更新材質	Jack	042214
1	圖面更新	FrankWu	112811

CONTACT 建倚科技股份有限公司
CONTACT TECHNOLOGY CORP.

TOLERANCE UNLESS OTHERWISE STATED : Up to 5 ±0.2; Above 5 ~ 15 ±0.3; Above 15 ~ 30 ±0.4; Above 30 ~ 50 ±0.5; Angle ±0.3°

3RD. ANGEL'S | UNITS | MM

DRAWN BY: Jack Lu	DATE 08/04/15	MAT'L	
CHECKED BY: Jacky Chen	DATE 08/04/15	FINISH	
APPROVED BY: Tony Kao	DATE 08/04/15	SCALE 1 : 1	SHEET NO. 1 of 1

TITLE	JACK		
MODLE	DC JACK		
DWG NO.	DC-063DS-S119	SIZE	A4
PART NO.	DC-063DS-S119	VER	R2