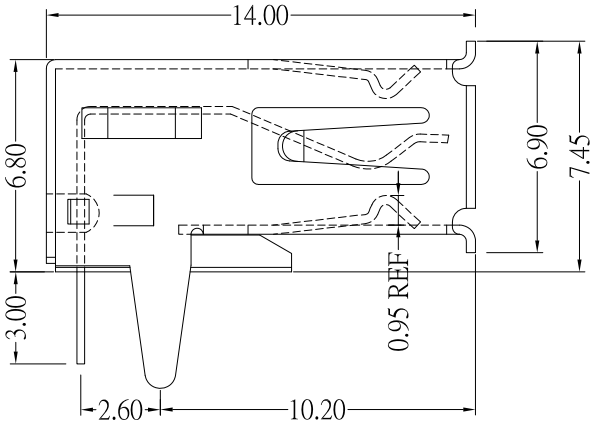

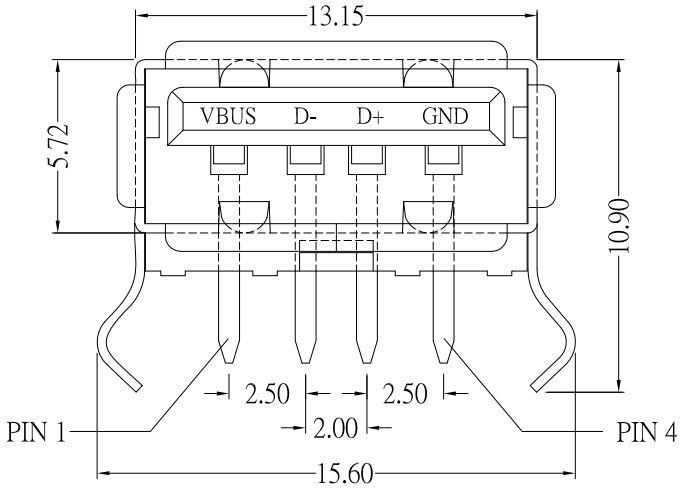

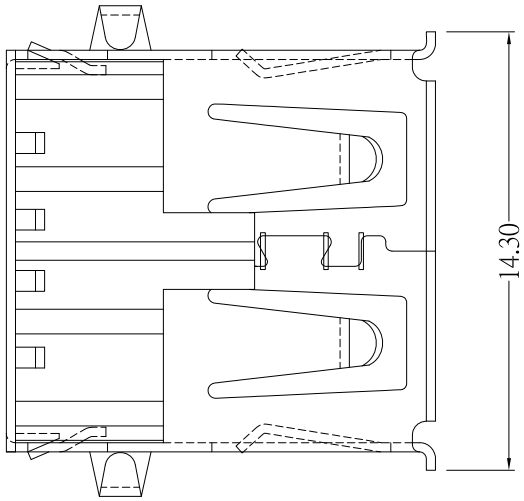

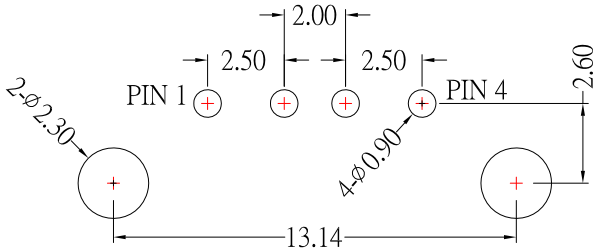

SUA-110H6x-xx-S175

SHELL MATERIAL :

Blank : BRASS
I : SPCC

鍍層厚度 :

Blank : 1u"
2 : 15u"
3 : 30u"

Color :

B	Black :Housing : LCP
W	White:Housing : PBT
BL	Blue:Housing : PBT

SPECIFICATIONS

Electrical:

1.Current Rating: 1.5A / contact terminal

2.Voltage Rating: 30V DC

3.Contact Resistance: 30 milliohms Max

4.Dielectric Withstanding Voltage:

500 V AC AT Sec Level

5.Insulation Resistance: 1000 MEGA ohms Min

6.Operating Temperature: -40˚C~85˚C

Mechanical:

1.Connector Mate and Unmate Force

Mate force: 3.57 kgf (Max)

Unmate force: 1.02 kgf (Min)

2.Terminal Retention: 1.2 kgf (Min)

Material:

1.Housing:High Temperature Thermal Plastics,

2.Contact: BRASS

3.Shell: BRASS / SPCC

Finish:

1.Contact: Plated Gold in Mating Area ;

Tin Plated on Solder Balls ;

Nickel under plated overall

2.Shell: Nickel under Plated surface layer

ITEM NO.	DESCRIPTION	DRAWN	DATE
8	新增Operating Temperature	Jack	052418
7	新增PIN電路標示	Jack	122016
6	新增PIN標示	Jack	102214
5	新增7.45的尺寸	Jack	081514
4	新增6.80的尺寸	Jack	052714
3	新增10.20的尺寸	Jack	051614
2	更新料號及材質和鍍層	Jack	112913
1	新增鍍層選項	Jack	072613
10	更新顏色材質選項	Jack	101620
9	更新Operating Temperature	Jack	052518

CONTACT 建倚科技股份有限公司
CONTACT TECHNOLOGY CORP.

TOLERANCE UNLESS OTHERWISE STATED : Up to 5 ±0.2; Above 5 ~ 15 ±0.3; Above 15 ~ 30 ±0.4; Above 30 ~ 50 ±0.5; Angle ±0.3°

3RD. ANGEL'S | UNITS | MM

DRAWN BY: Jack Lu	DATE 10/16/20	MAT'L	
CHECKED BY: Jacky Chen	DATE 10/16/20	FINISH	
APPROVED BY: Tony Kao	DATE 10/16/20	SCALE 1 : 1	SHEET NO. 1 of 1

TITLE	CONNECTOR
MODLE	USB AF DIP TYPE
DWG NO.	SUA-110H6x-xx-S175
PART NO.	SUA-110H6x-xx-S175
SIZE	A4
VER	A10