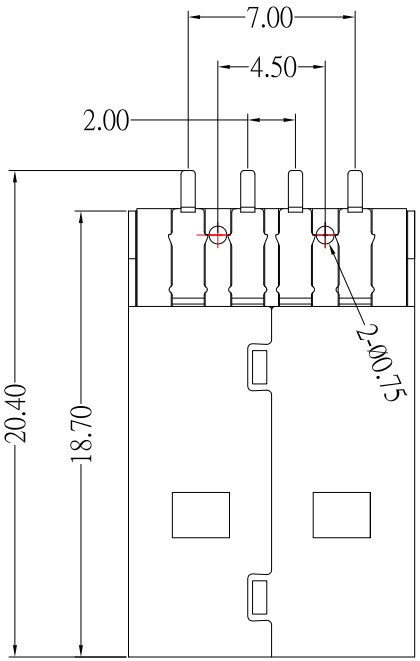


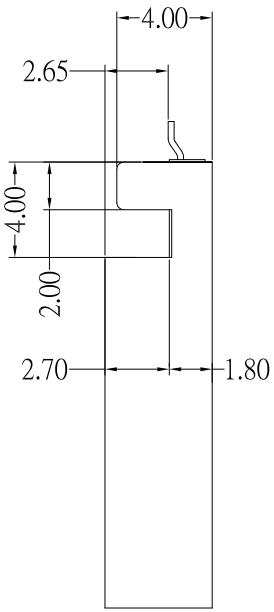


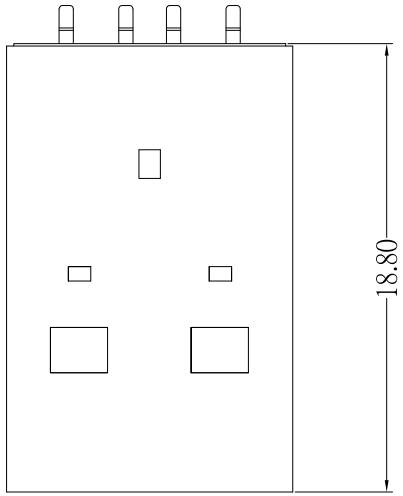


RoHS Compliant

## P.C.B LAYOUT MOUNTING PATTERN

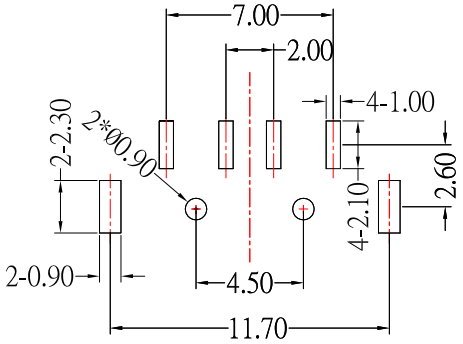


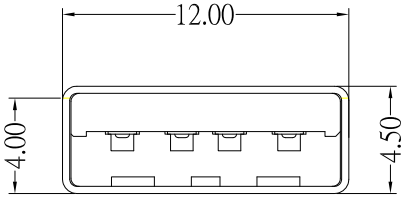


SUA-112M3-x-x-S129

COLOR :

| |
|---|
| Black: B |
| White : W |

鍍層厚度 :

| |
|---|
| Blank : 1u" |
| 2 : 15u" |
| 3 : 30u" |

NOTE:

1.MATERIAL:

a.HOUSING: PA9T GLASS FIBRE UL94 V-0 , BLACK ;

b.CONTACT: BRASS ;

c.SHELL: SPCC ;

2.ELECTRIC

a.CONTACT RESISTANCE: 30 MILLIOHMS MAX ;

b.INSULATION RESISTANCE: 1000 MEGA OHMS MIN ;

c.DIELECTRIC VOLTAGE: 500 V AC ONE SEC LEVEL ;

d.OPERATING TEMPERATURE: -55˚C~+85˚C .

| NO. | NAME | MATERIAL | FINISH | REMARK | Q'TY |
|---|---|---|---|---|---|
| 3 | SHELL | SPCC | NICKRL PLATED | Cu + Ni | 1 |
| 2 | PIN TERM | BRASS | GOLD/TIN PLATED | Au + Sn + Ni | 4 |
| 1 | HOUSING | PA9T | BLACK | | 1 |

| ITEM NO. | DESCRIPTION | DRAWN | DATE |
|---|---|---|---|
| 2 | 新增P.C.B LAYOUT尺寸 | Jack | 011415 |
| 1 | Drawing update | FrankWu | 040312 |

CONTACT 建倚科技股份有限公司 CONTACT TECHNOLOGY CORP.

TOLERANCE UNLESS OTHERWISE STATED : Up to 5 ±0.2; Above 5 ~ 15 ±0.3; Above 15 ~ 30 ±0.4; Above 30 ~ 50 ±0.5; Angle ±0.3˚

3RD. ANGEL'S | UNITS MM

| | | | |
|---|---|---|---|
| DRAWN BY: Jack Lu | DATE 01/14/15 | MAT'L | |
| CHECKED BY: Jacky Chen | DATE 01/14/15 | FINISH | |
| APPROVED BY: Tony Kao | DATE 01/14/15 | SCALE 1 : 1 | SHEET NO. 1 of 1 |

| | | | |
|---|---|---|---|
| TITLE | CONNECTOR | | |
| MODLE | USB AM SINK TYPE H:1.8mm | | |
| DWG NO. | SUA-112M3-x-x-S129 | SIZE | A4 |
| PART NO. | SUA-112M3-x-x-S129 | VER | R1 |