IP67

RoHS Compliant

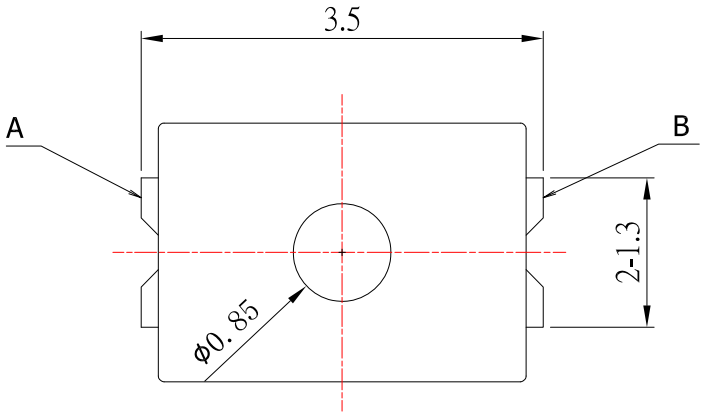

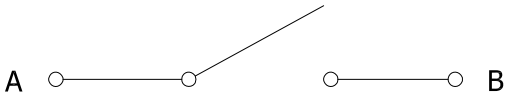

CIRCUIT DIAGRAM

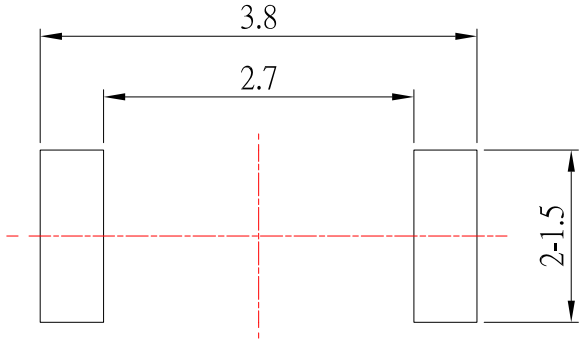

P.C.B LAYOUT MOUNTING PATTERN

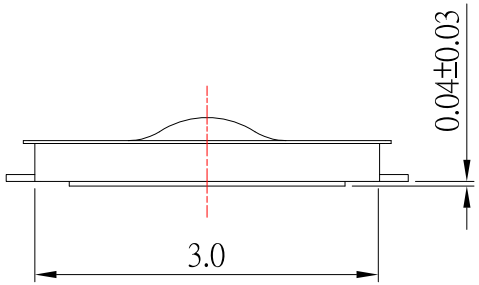

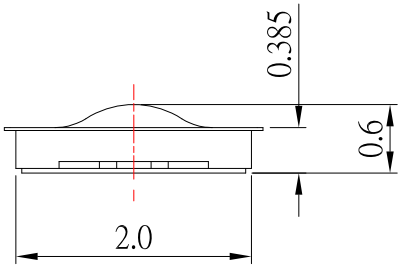

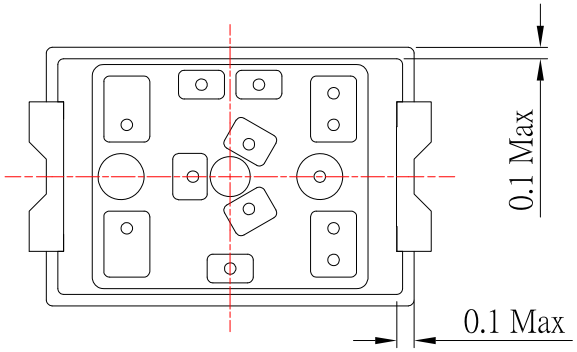

SPECIFICATIONS

Rating	DC 15V 20mA			
Contact Resistance	500mΩ Max.			
Travel	0.13 ± 0.1mm			
Operating Force	3	240 ± 70gf	4	330 ± 70gf
Operating Life (cycles)	500,000		300,000	

ITEM NO.	DESCRIPTION	DRAWN	DATE
5	更新尺寸	Jack	061919
4	新增尺寸公差	Jack	061418
3	IP67標示位置更新	Jack	091417
2	更新尺寸	Jack	081816
1	新增Water-proof level	Jack	081616

CONTACT 建倚科技股份有限公司 CONTACT TECHNOLOGY CORP.

TOLERANCE UNLESS OTHERWISE STATED: Up to 5 ±0.2; Above 5 ~ 15 ±0.3; Above 15 ~ 30 ±0.4; Above 30 ~ 50 ±0.5; Angle ±0.3°

3RD. ANGEL'S | UNITS MM

DRAWN BY: Jack Lu	DATE 06/19/18	MAT'L	
CHECKED BY: Jacky Chen	DATE 06/19/18	FINISH	
APPROVED BY: Tony Kao	DATE 06/19/18	SCALE 1 : 1	SHEET NO. 1 of 1

TITLE	SWITCH		
MODLE	TACT SWITCH(內置按鈕)for Waterproof		
DWG NO.	TS-A29A-x-S048	SIZE	A4
PART NO.	TS-A29A-x-S048	VER	R5