SUA-110M12-x-x-S165

鍍層厚度 :

Blank : 1u"
2 : 15u"
3 : 30u"

COLOR :

Black : B
White : W

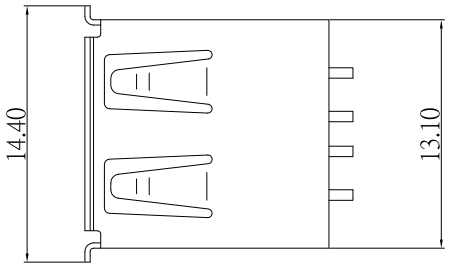

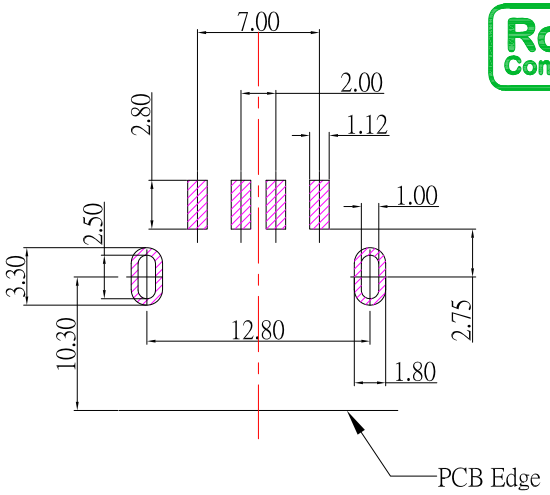

PCB LAYOUT MOUNTING PATTERN

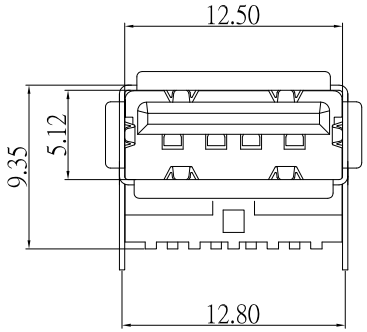

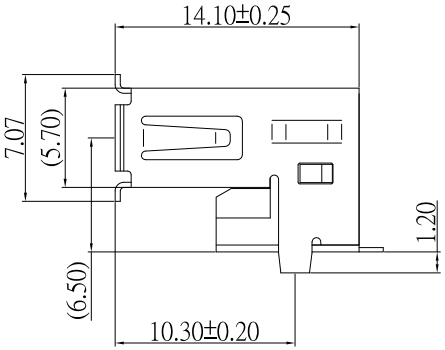

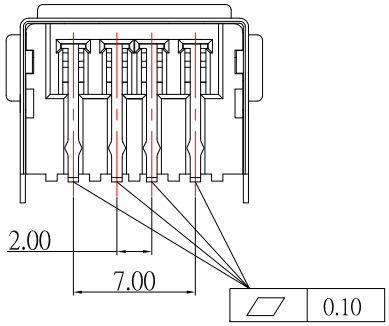

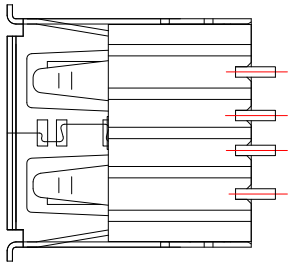

Material:

1.Housing: LCP

2.Contact: BRASS

3.Shell: BRASS

Finish:

1.Contact: Plated Gold in Mating Area ;

Tin Plated on Solder Balls ;

Nickel under plated overall

2.Shell: Nickel under Plated surface layer

ITEM NO.	DESCRIPTION	DRAWN	DATE

CONTACT 建倚科技股份有限公司 CONTACT TECHNOLOGY CORP.

TOLERANCE UNLESS OTHERWISE STATED : Up to 5 ±0.2; Above 5 ~ 30 ±0.3; Above 30 ~ 50 ±0.4; Above 50 ±0.5; Angle ±0.3°

3RD. ANGEL'S | UNITS MM

DRAWN BY: Jack Lu	DATE 05/08/19	MAT'L		TITLE	CONNECTOR
CHECKED BY: Jacky Chen	DATE 05/08/19	FINISH		MODLE	USB AF R/A SMT H:9.35mm
APPROVED BY: Tony Kao	DATE 05/08/19	SCALE	1 : 1	DWG NO.	SUA-110M12-x-x-S165
		SHEET NO.	1 of 1	PART NO.	SUA-110M12-x-x-S165

SIZE A4 | VER R