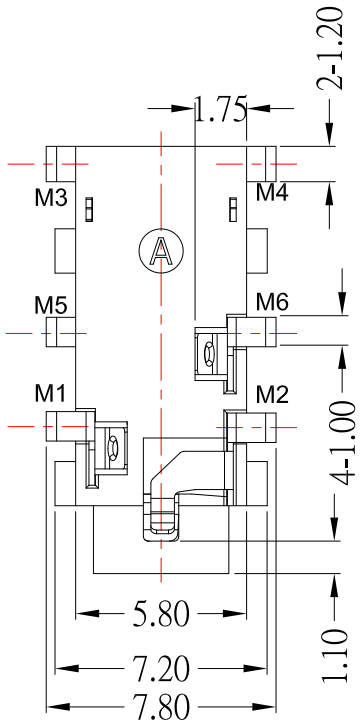

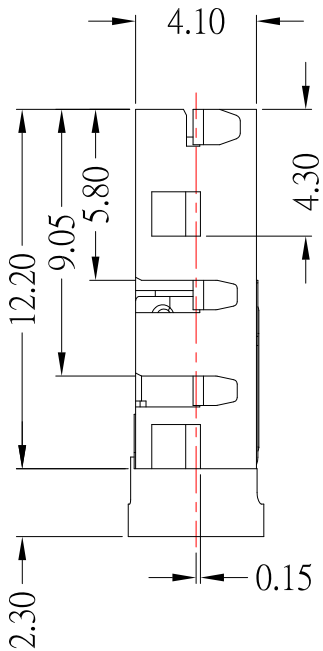

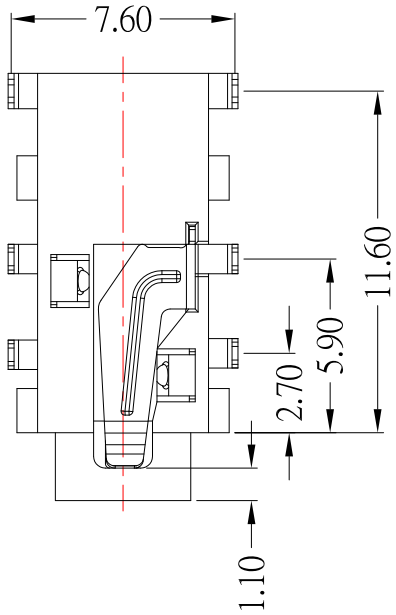

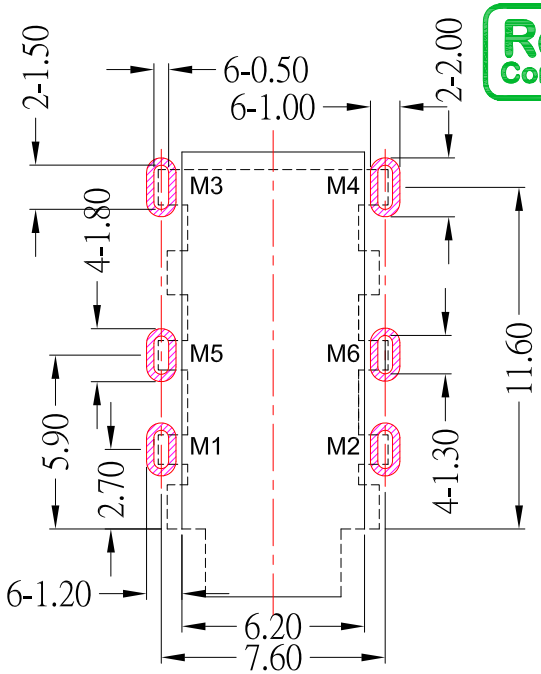

P.C.B LAYOUT
TOP VIEW

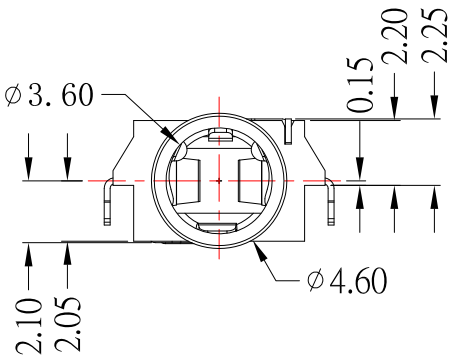

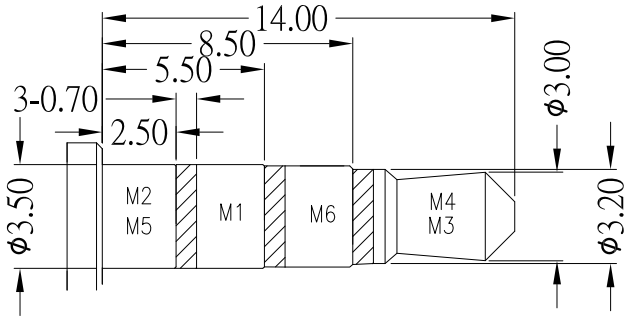

□3.5 MATE PLUG

MODEL NO.	PJ-5356D
SCHEMATIC	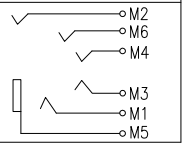

SPECIFICATIONS:

1.CURRENT RATING: 0.3A,16V DC.
2.CONTACT RESISTANCE: 30mΩ MAX.
3.INSULATION RESISTANCE: 100MΩ MIN AT 500V DC.
4.WITHSTAND VOLTAGE: AC 500V/ 1 MINUTE.
4.OPERATING TEMPERATURE RANGE: -25°C TO +85°C.
5. INSERTION FORCE: 0.3~3.0Kgf.
6. EXTRACTION FORCE: 0.3~3.0Kgf.

ITEM	DESCRIPTIONs	MATERIAL	FINISH	Q'TY
⑦	TERMINAL M6	PHOSPHOR BRONZE	Gold Plated	1
⑥	TERMINAL M5	PHOSPHOR BRONZE	Gold Plated	1
⑤	TERMINAL M4	PHOSPHOR BRONZE	Gold Plated	1
④	TERMINAL M3	PHOSPHOR BRONZE	Gold Plated	1
③	TERMINAL M2	PHOSPHOR BRONZE	Gold Plated	1
②	TERMINAL M1	PHOSPHOR BRONZE	Gold Plated	1
①	HOUSING	PA9T		1

ITEM NO.	DESCRIPTION	DRAWN	DATE
2	更新Ø3.5 MATE PLUG	Jack	052821
1	更新為A0版	Jack	091416

CONTACT 建倚科技股份有限公司
CONTACT TECHNOLOGY CORP.

TOLERANCE UNLESS OTHERWISE STATED : Up to 5 ±0.2; Above 5 ~ 15 ±0.3; Above 15 ~ 30 ±0.4; Above 30 ~ 50 ±0.5; Angle ±0.3°

3RD. ANGEL'S

UNITS MM

DRAWN BY: Jack Lu	DATE 05/28/21	MAT'L	
CHECKED BY: Jacky Chen	DATE 05/28/21	FINISH	
APPROVED BY: Tony Kao	DATE 05/28/21	SCALE 1 : 1	SHEET NO. 1 of 1

TITLE	JACK		
MODLE	PHONE JACK		
DWG NO.	PJ-5356D-S214	SIZE	A4
PART NO.	PJ-5356D-S214	VER	R2