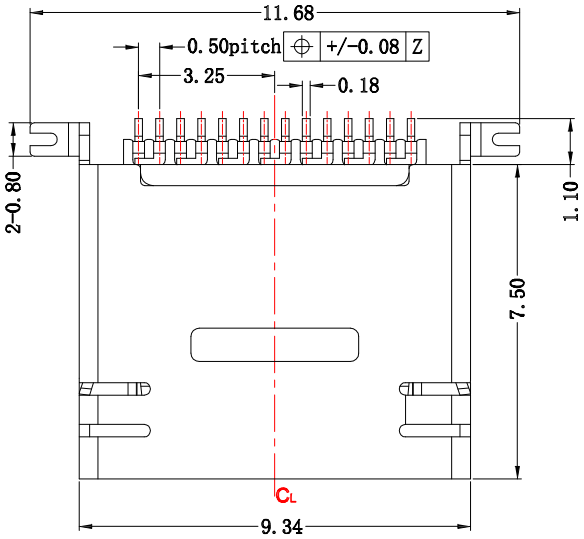


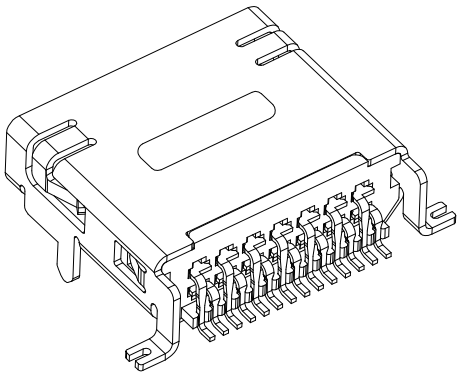

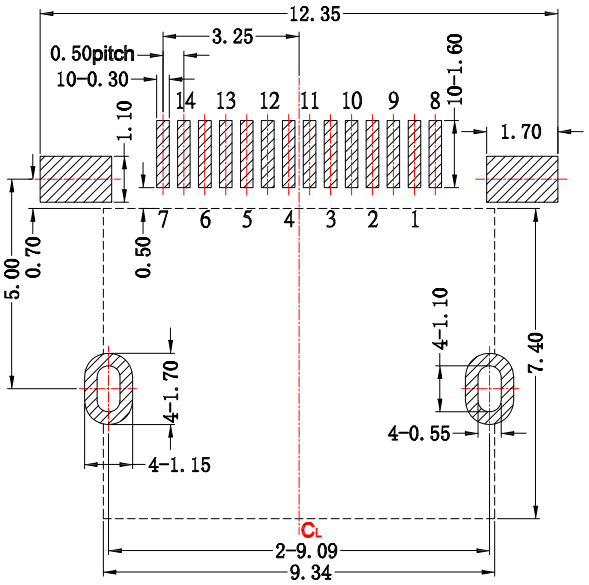


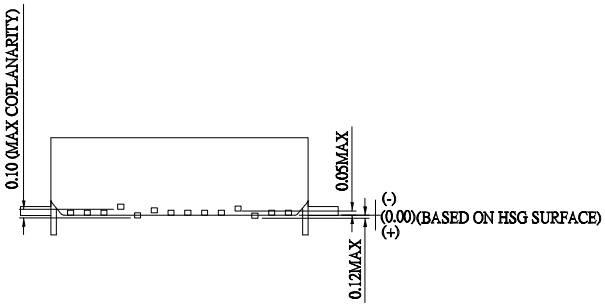


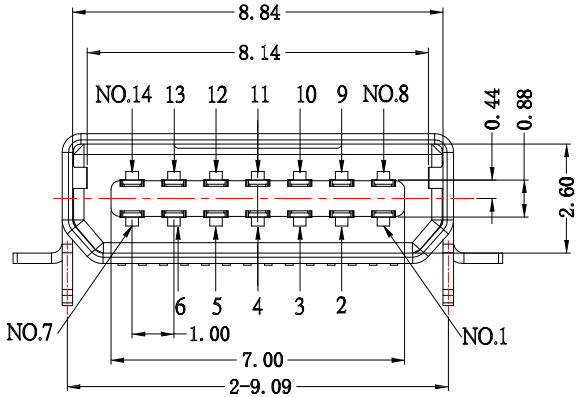


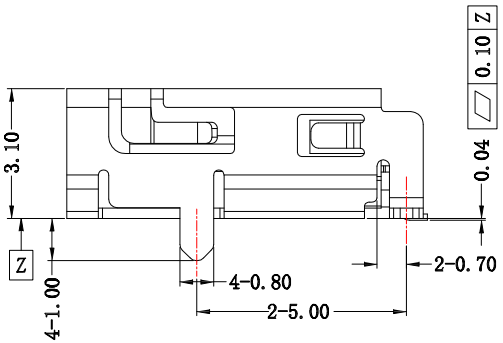


P.C.B LAYOUT MOUNTING PATTERN

SPECIFICATIONS

Material:

1.Housing: LCP,UL94V-0,Black

2.Contact: Phosphor Bronze

3.Shell: Phosphor Bronze

Finish:

1.Contact: Plated Gold in Mating Area ;

Gold Plated on Solder Balls ;

Nickel under plated overall

2.Shell: Tin under Plated surface layer

| ITEM NO. | DESCRIPTION | DRAWN | DATE |
|---|---|---|---|
| | | | |

CONTACT 建倚科技股份有限公司 CONTACT TECHNOLOGY CORP.

TOLERANCE UNLESS OTHERWISE STATED : Up to 5 ±0.2; Above 5 ~ 15 ±0.3; Above 15 ~ 30 ±0.4; Above 30 ~ 50 ±0.5; Angle ±0.3°

3RD. ANGEL'S | UNITS | MM

| | | | | | |
|---|---|---|---|---|---|
| DRAWN BY: Jack Lu | DATE 09/10/15 | MAT'L | | TITLE | CONNECTOR |
| CHECKED BY: Jacky Chen | DATE 09/10/15 | FINISH | | MODLE | MINI USB 14P 前插後貼 |
| APPROVED BY: Tony Kao | DATE 09/10/15 | SCALE | 1 : 1 | DWG NO. | MUSB-14P-SDTN-S320 |
| | | SHEET NO. | 1 of 1 | PART NO. | MUSB-14P-SDTN-S320 |

SIZE A4 | VER R